Focus
Electronic basin mixer with temperature pre-adjustment battery operation
Surfaces: Article Number: **31172000**

Exploded Drawing

Year of production: **02/16 - 04/21**

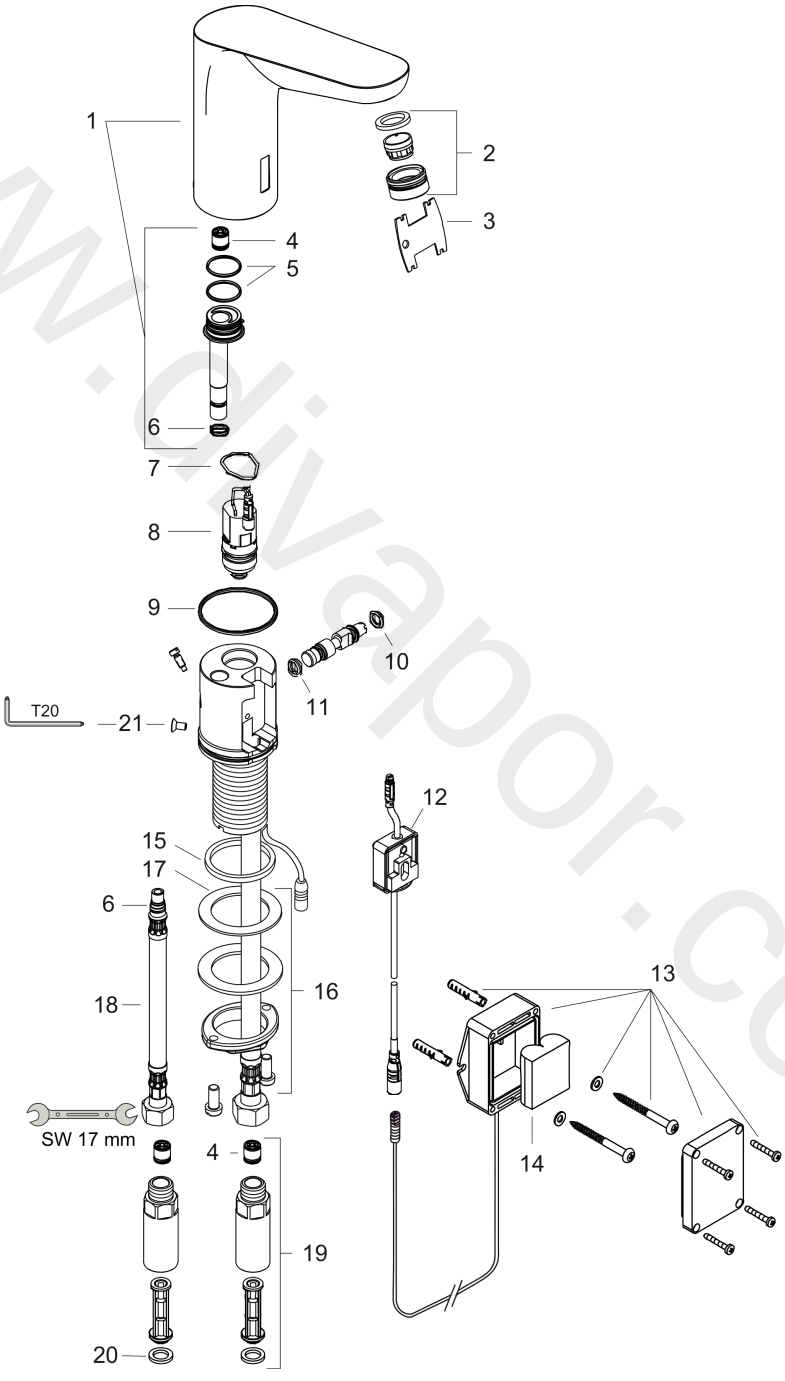

www.divapor.com

Focus
Electronic basin mixer with temperature pre-adjustment battery operation
Surfaces: Article Number: **31172000**

Spare part list

Year of production: **02/16 - 04/21**

Pos.	Description	Article Number	Price	PU
1	mixer-hood	92310000	£ 370,00	1
2	aerator M24x1 (5 l/min)	98802000	£ 51,00	1
3	service tool	98808000	£ 16,10	1
4	non return valve DW 10	96456000	£ 9,00	1
5	O-ring 18x1,5	98231000	£ 3,30	1
6	O-ring 7x1,5	98422000	£ 3,30	1
7	O-ring 17x2	98199000	£ 3,30	1
8	solenoid valve	95654000	£ 173,00	1
9	O-ring 41x2	98212000	£ 3,30	1
10	O-ring 6x2	98458000	£ 3,30	1
11	O-ring 5x2	98215000	£ 3,30	1
12	electronics	92346000	£ 173,00	1
13	battery box	98801000	£ 51,00	1
14	battery CR-P2 / 6V lithium	97399000	-	1
15	flat seal	98749000	£ 6,10	1
16	fixing set (Ø 32)	13961000	£ 25,00	1
17	lever collar	97548000	£ 3,30	1
18	connection hose 450 mm	92345000	£ 35,00	1
19	back flow preventor cartridge with microfilter	92297000	£ 96,00	1
20	sealing set	95581000	£ 6,10	1
21	screw	93272000	£ 3,30	1
a	fixation extension 35 mm	13898000	£ 79,00	1

www.divapor.com