DESIGN + ENGINEERING
GROHE GERMANY

96.868.031/ÄM 216371/11.17

www.grohe.com

Pure Freude an Wasser

GROHE

29 037

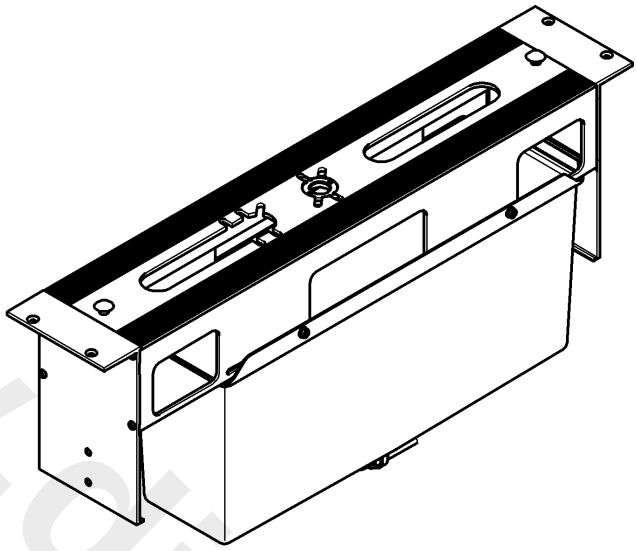

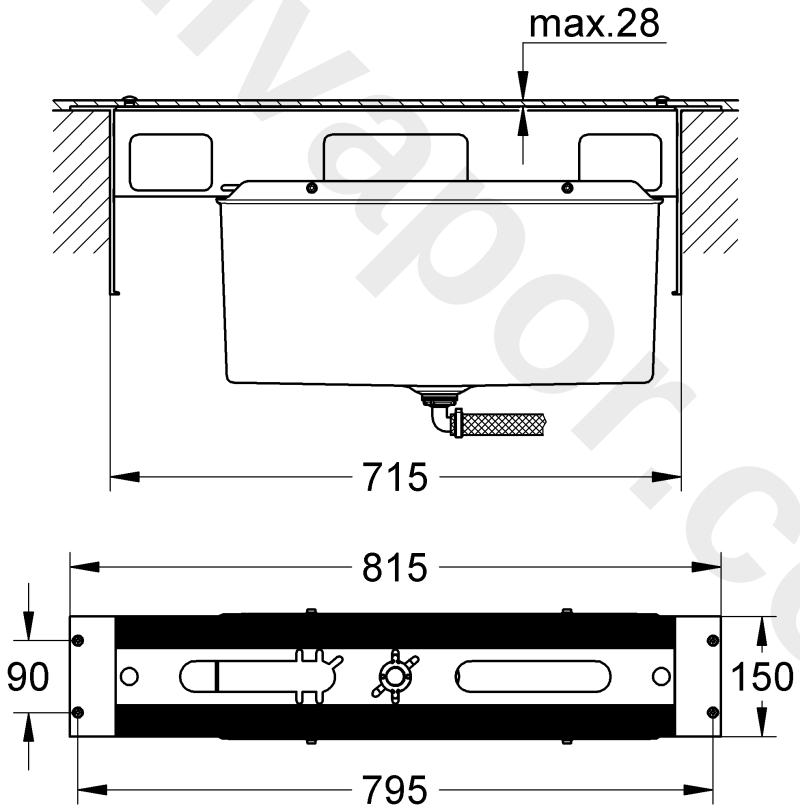

1

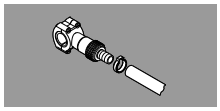

2

3 - 5

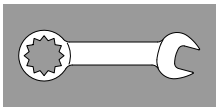

6

7

www.aivapor.com

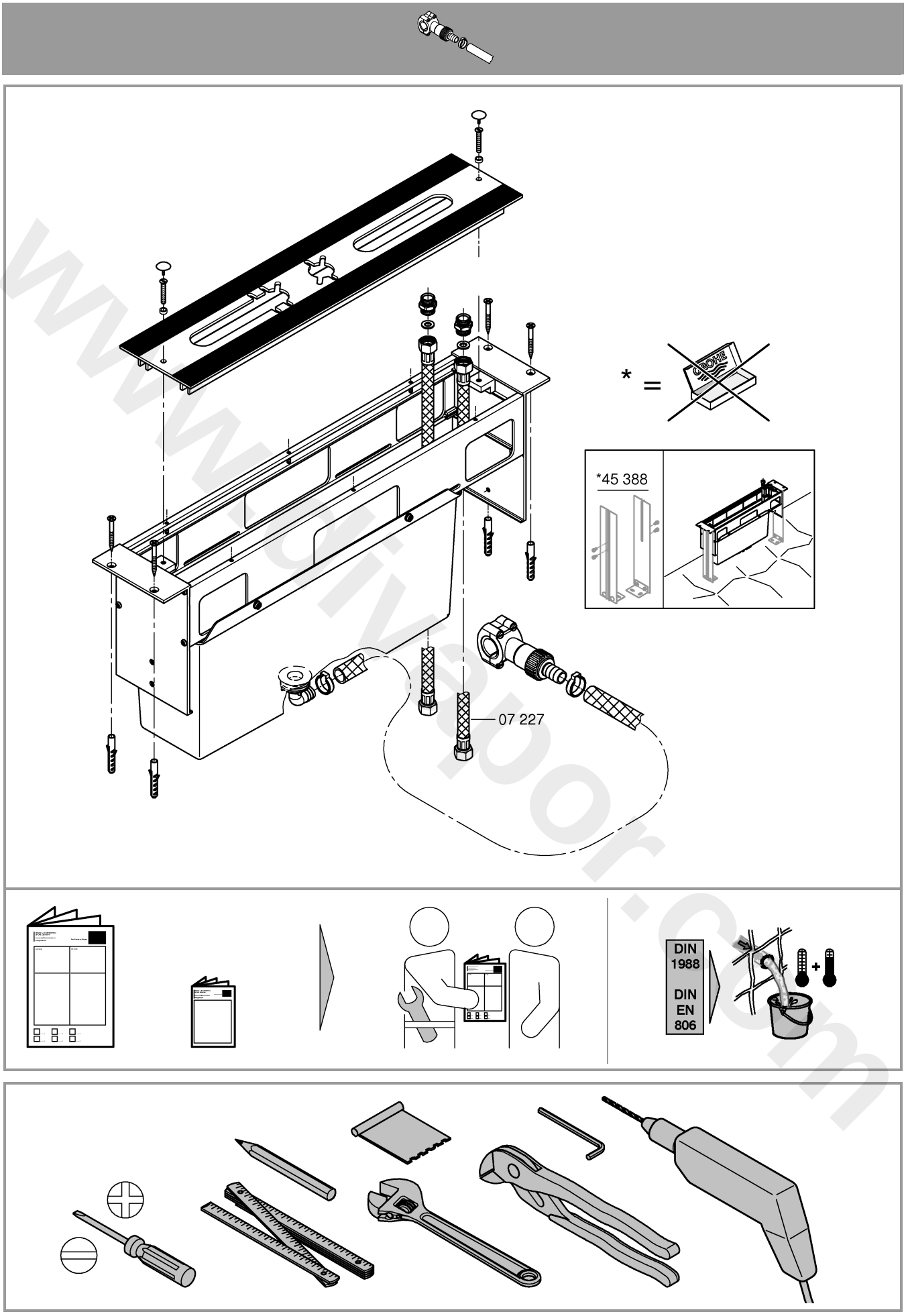

www.sivapoor.com

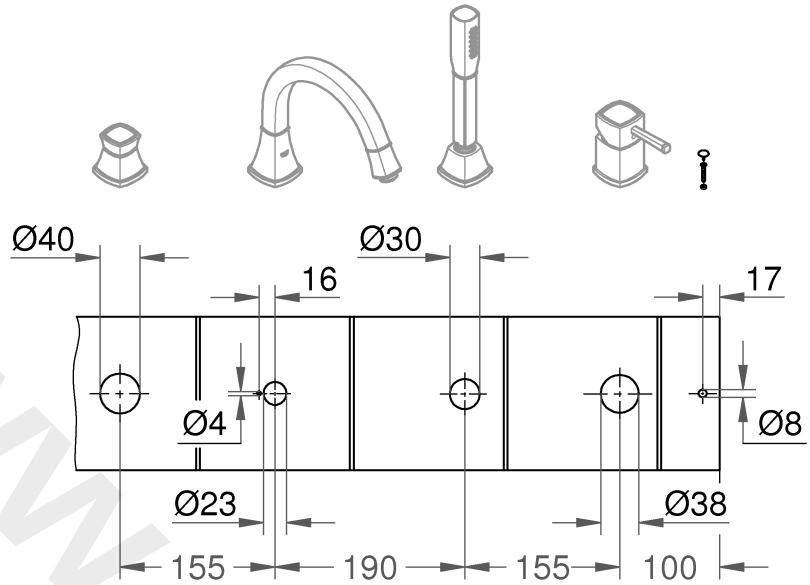

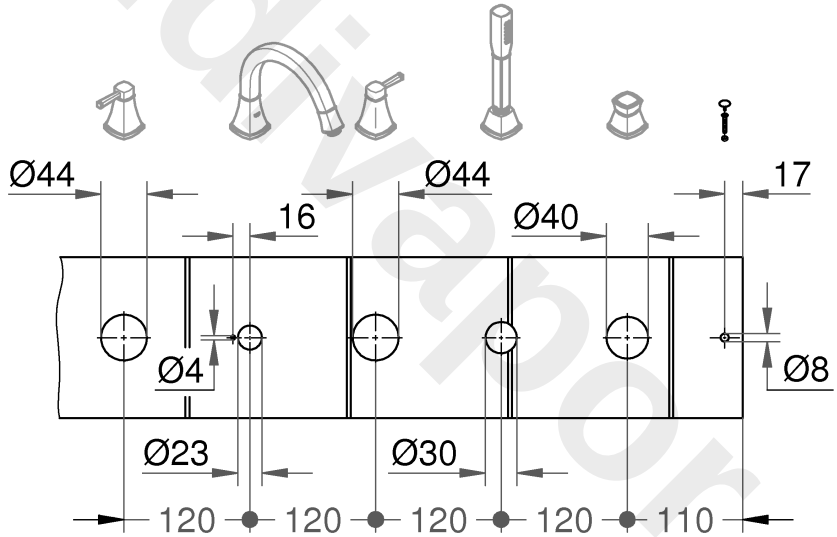

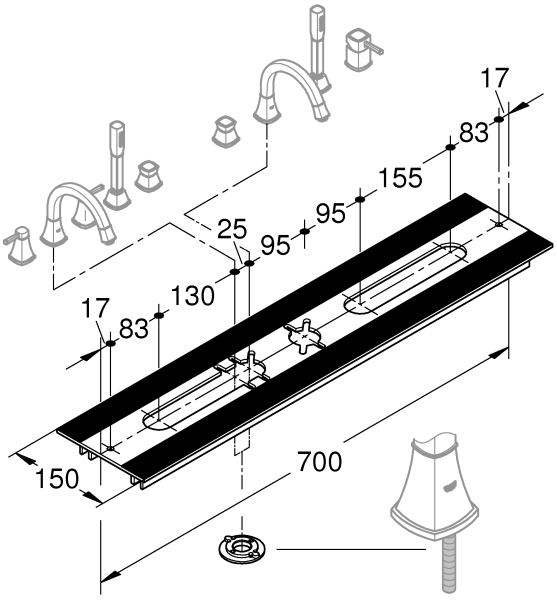

www.divapor.com

1a

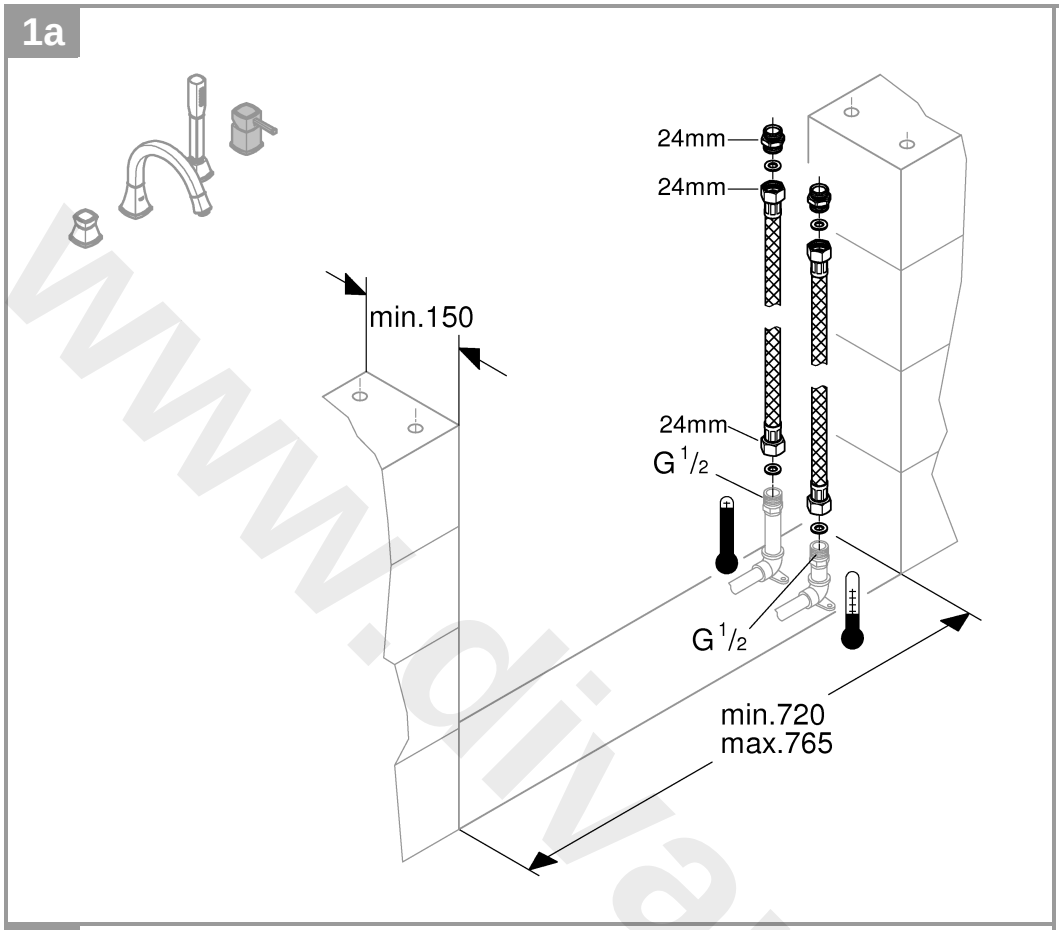

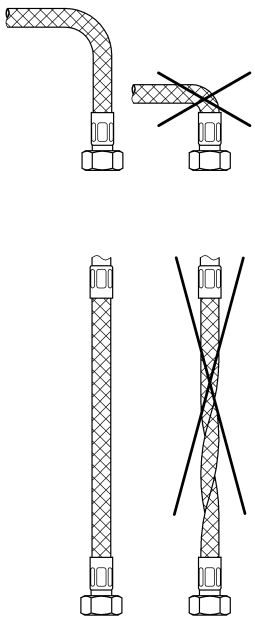

1b

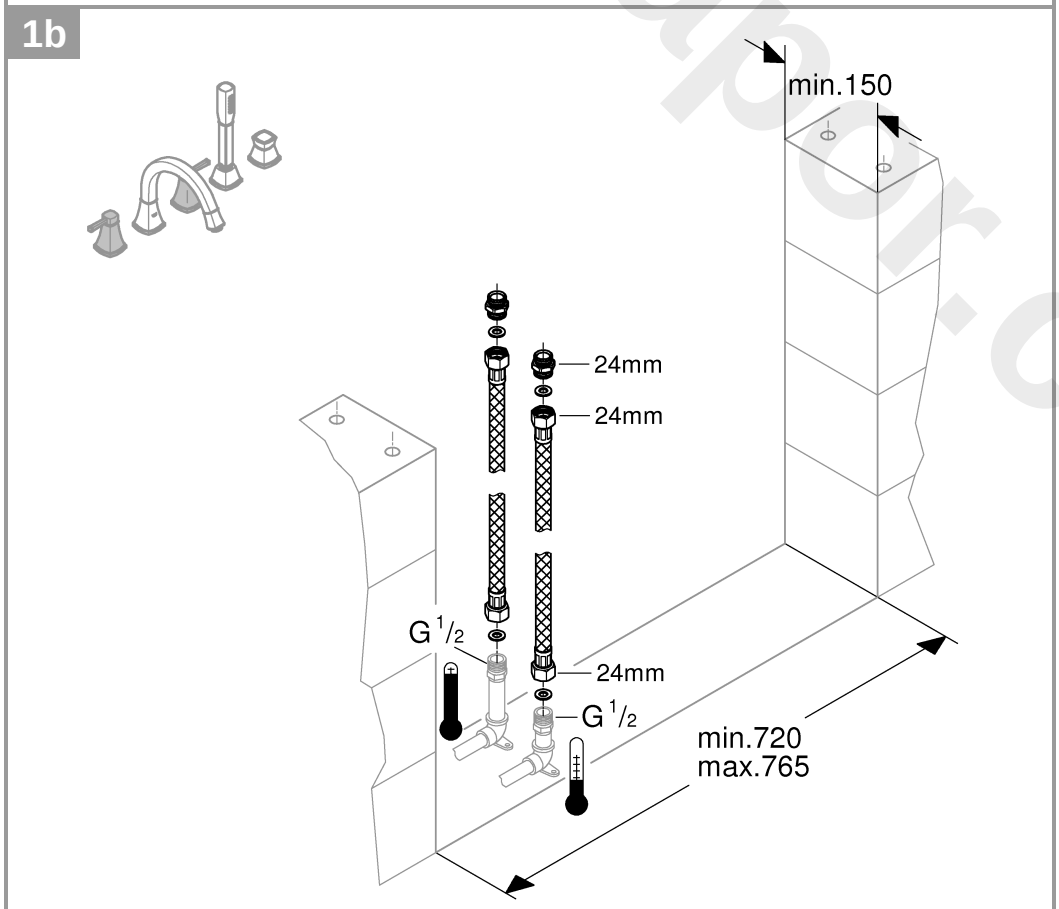

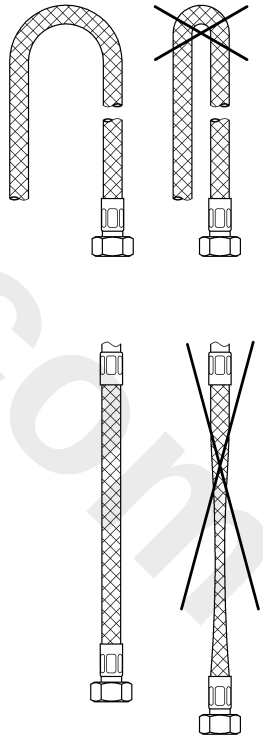

www.diyapper.com

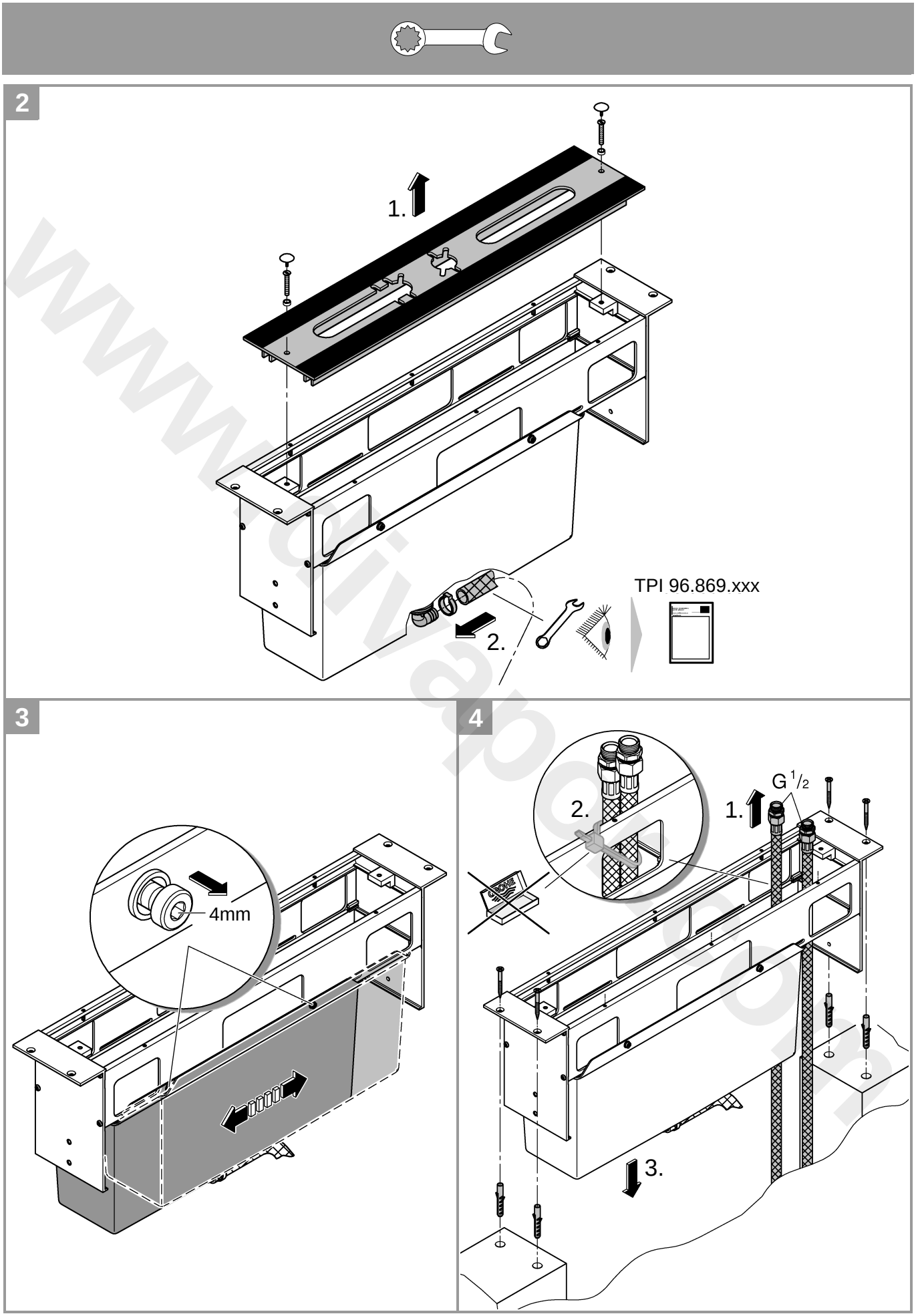

www.divapool.com

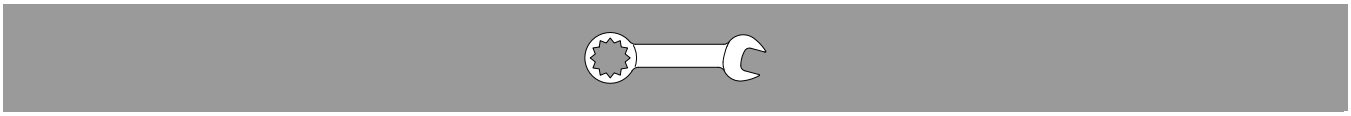

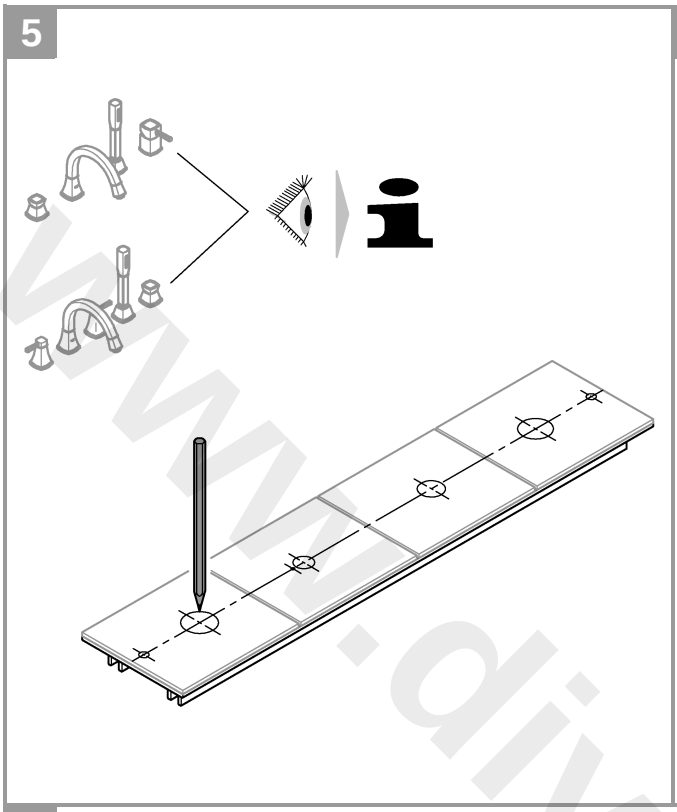

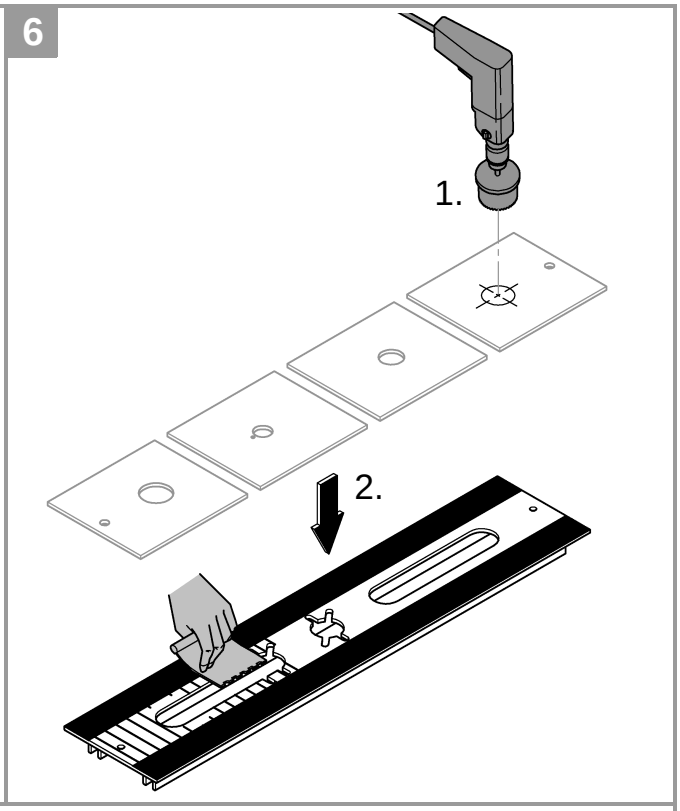

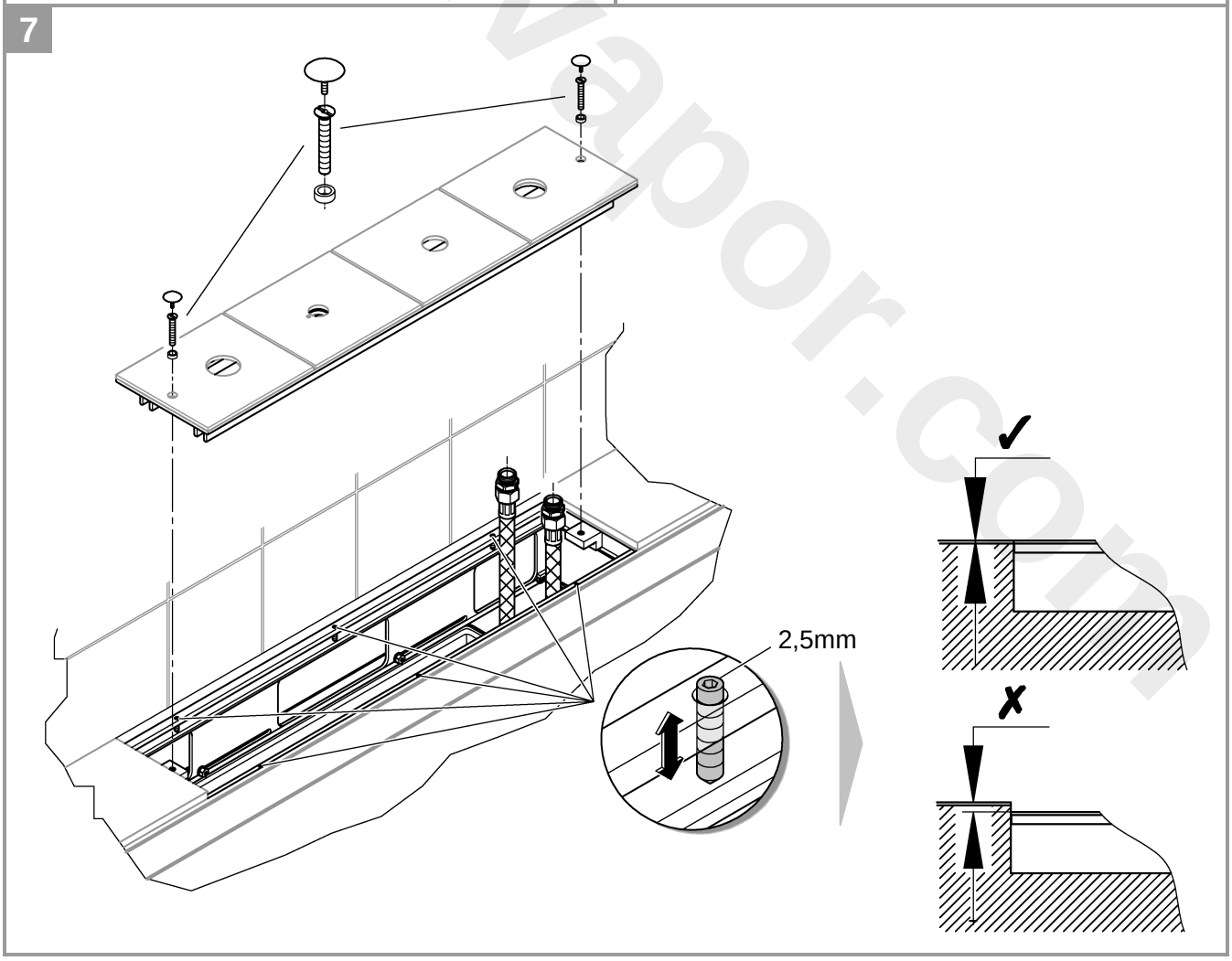

www.divapoor.com

www.divapor.com

Pure Freude an Wasser

GROHE

D
✆ +49 571 3989 333
helpline@grohe.de

A
✆ +43 1 68060
info-at@grohe.com

AUS
✆ +(61) 1300 54945
grohe_australia@lixil.com

B
✆ +32 16 230660
info.be@grohe.com

BG
✆ +359 2 9719959
grohe-bulgaria@grohe.com

BR
✆ 0800 770 1222
falecom@grohe.com

CAU
✆ +99 412 497 09 74
info-az@grohe.com

CDN
✆ +1 888 6447643
info@grohe.ca

CH
✆ +41 44 877 73 00
info@grohe.ch

CN
✆ +86 4008811698
info.cn@grohe.com

CY
✆ +357 22 465200
info@grome.com

CZ
✆ +358 942 451 390
grohe-cz@grohe.com

DK
✆ +45 44 656800
grohe@grohe.fi

E
✆ +34 93 3368850
grohe@grohe.es

EST
✆ +372 6616354
grohe@grohe.ee

F
✆ +33 1 49972900
sav-fr@grohe.com

FIN
✆ +358 942 451 390
grohe@grohe.fi

GB
✆ +44 871 200 3414
info-uk@grohe.com

GR
✆ +30 210 2712908
nsapountzis@ath.forthnet.gr

H
✆ +36 1 2388045
info-hu@grohe.com

HK
✆ +852 2969 7067
info@grohe.hk

I
✆ +39 2 959401
info-it@grohe.com

IND
✆ +91 1800 102 4475
customercare.in@grohe.com

IS
✆ +354 515 4000
jonst@byko.is

J
✆ +81 3 32989730
info@grohe.co.jp

KZ
✆ +7 727 311 07 39
info-cac@grohe.com

LT
✆ +372 6616354
grohe@grohe.ee

LV
✆ +372 6616354
grohe@grohe.ee

MAL
info-malaysia@grohe.com

MX
✆ 01800 8391200
pregunta@grohe.com

N
✆ +47 22 072070
grohe@grohe.no

NL
✆ +31 79 3680133
vragen-nl@grohe.com

NZ
technicalenquiries@paterson trading.co.nz

P
✆ +351 234 529620
commercial-pt@grohe.com

PL
✆ +48 22 5432640
biuro@grohe.com.pl

RI
✆ 0-800-1-046743
customercare-indonesia@asia.lixil.com

RO
✆ +40 21 2125050
info-ro@grohe.com

ROK
✆ +82 2 1588 5903
info-singapore@grohe.com

RP
✆ +63 2 8938681

RUS
✆ +7 495 9819510
info@grohe.ru

S
✆ +46 771 141314
grohe@grohe.se

SGP
✆ +65 6311 3611
info-singapore@grohe.com

SK
✆ +420 277 004 190
grohe-cz@grohe.com

T
✆ +66 21681368
(Haco Group)
info@haco.co.th

TR
✆ +90 216 441 23 70
GroheTurkey@grome.com

UA
✆ +38 44 5375273
info-ua@grohe.com

USA
✆ +1 800 4447643
us-customerservice@grohe.com

VN
✆ +84 90 9694768
✆ +84 90 9375068
info-vietnam@grohe.com

AL BiH HR KS ME MK SLO SRB
✆ +385 1 2911470
adria-hr@grohe.com

Eastern Mediterranean, Middle East - Africa Area Sales Office:
✆ +357 22 465200
info@grome.com

IR OM UAE YEM
✆ +971 4 3318070
grohedubai@grome.com

Far East Area Sales Office:
✆ +65 6311 3600
info@grohe.com.sg

Latin America:
✆ +52 818 3050626
pregunta@grohe.com

www.grohe.com

2016/09/28

www.divasor.com