Bath - TARA

Bath mixer for wall mounting with hand shower set - Brushed Dark Platinum

Article number: 25 133 882-99

Date of manufacture from 5/27/2021

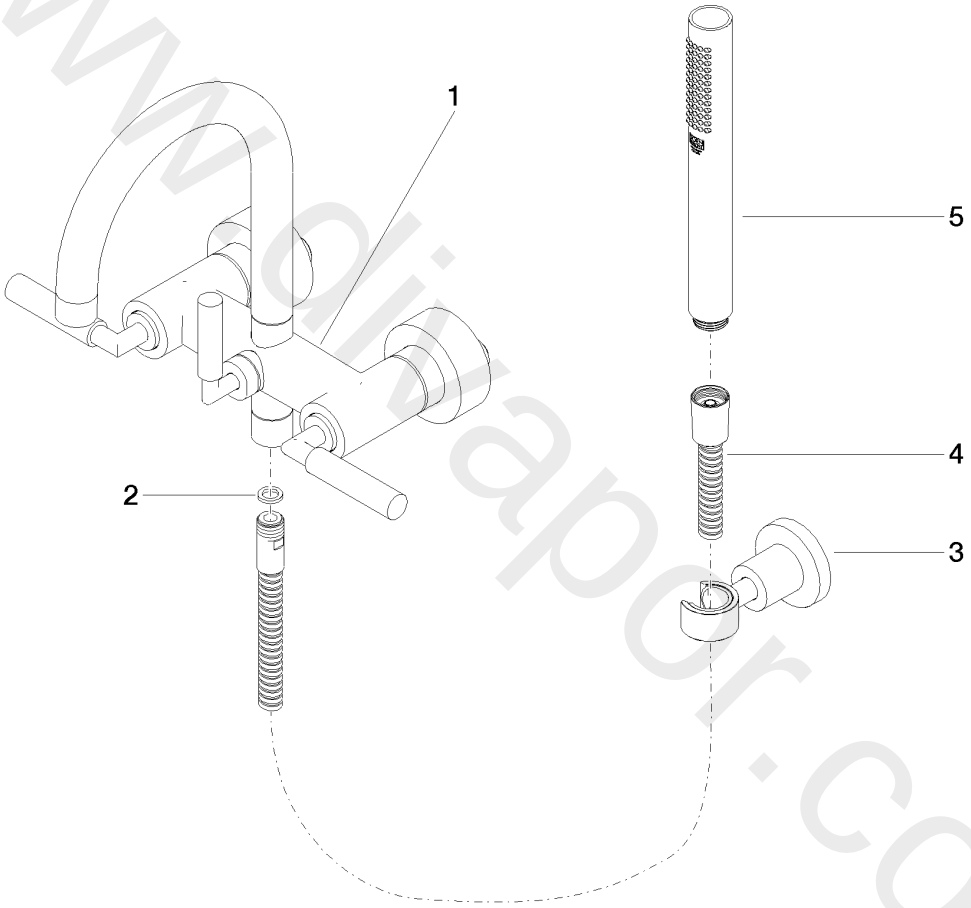

www.divapor.com

Bath - TARA

Bath mixer for wall mounting with hand shower set - Brushed Dark Platinum

Article number: 25 133 882-99

Date of manufacture from 5/27/2021

Spare parts list

Position	Quantity used	Item Number	Spare part	Delivery time
1	1	25 100 892-99	Bath mixer for wall mounting - Brushed Dark Platinum	30
2	1	09 14 20 026 90	seal	2
3	1	28 050 892-99	Wall bracket - Brushed Dark Platinum	50
4	1	90 30 02 072 00-99	Metal shower hose 1/2" x 3/8" x 1250 mm - Brushed Dark Platinum	30
5	1	90 12 11 140 30-99	shower	30

www.divapor.com