GROHE

ENJOY WATER®

18 389

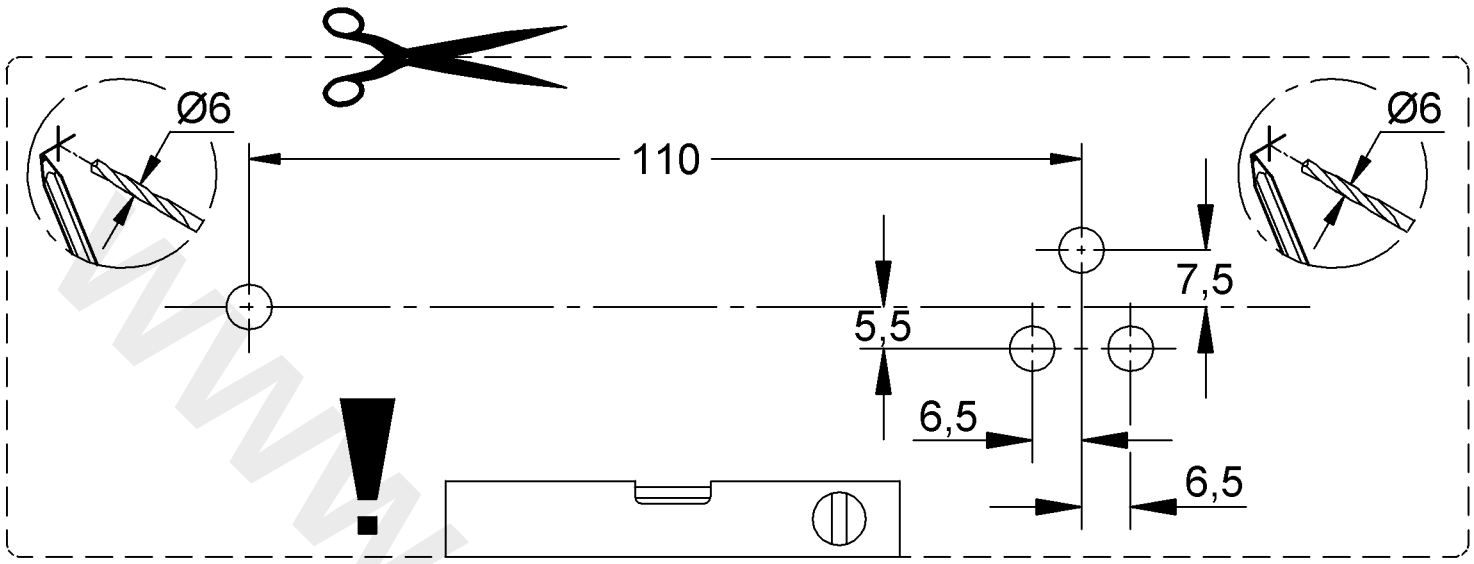

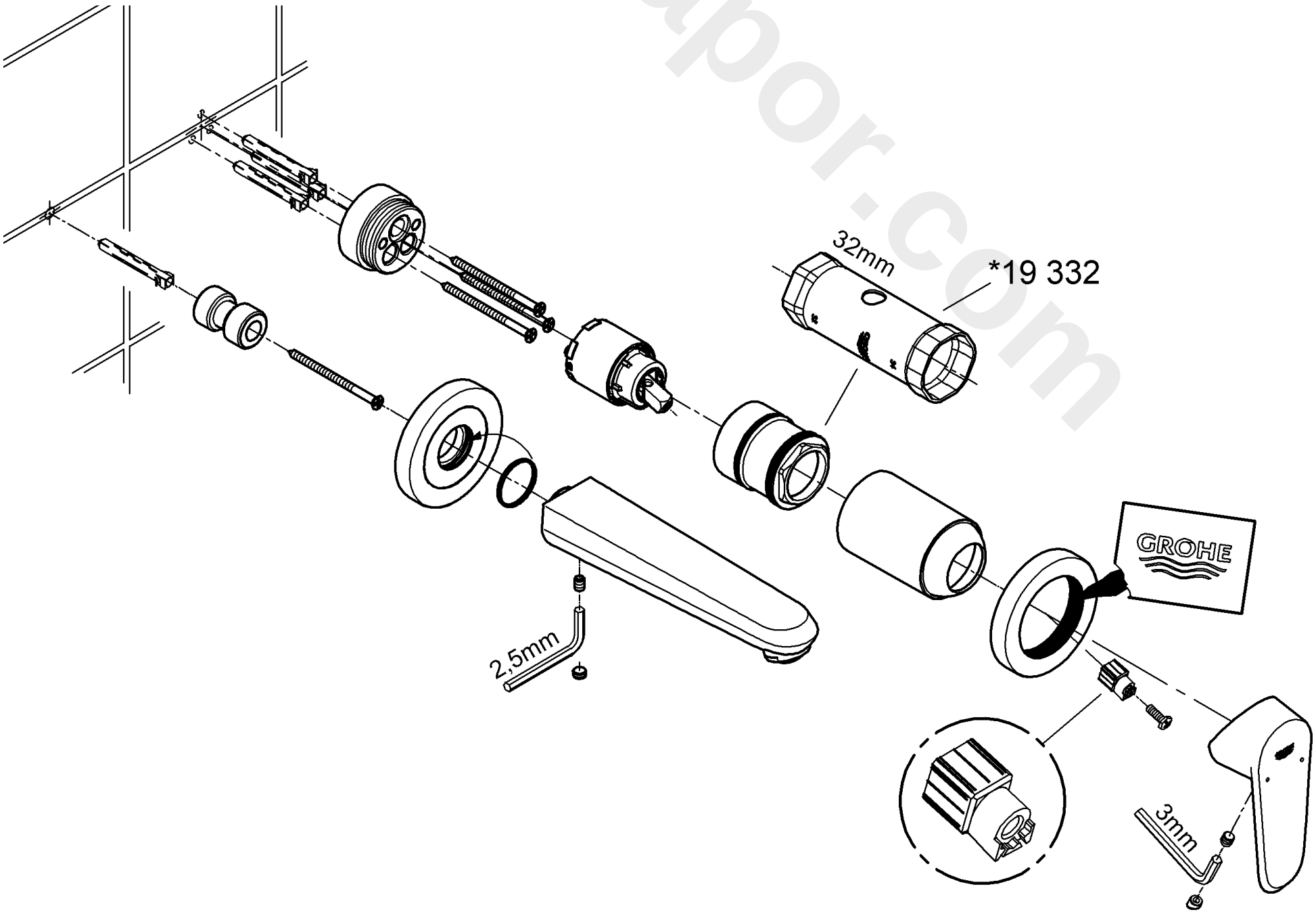

www.divapor.com

99.309.031/ÄM 218645/02.11