GROHE

ENJOY WATER®

18 386

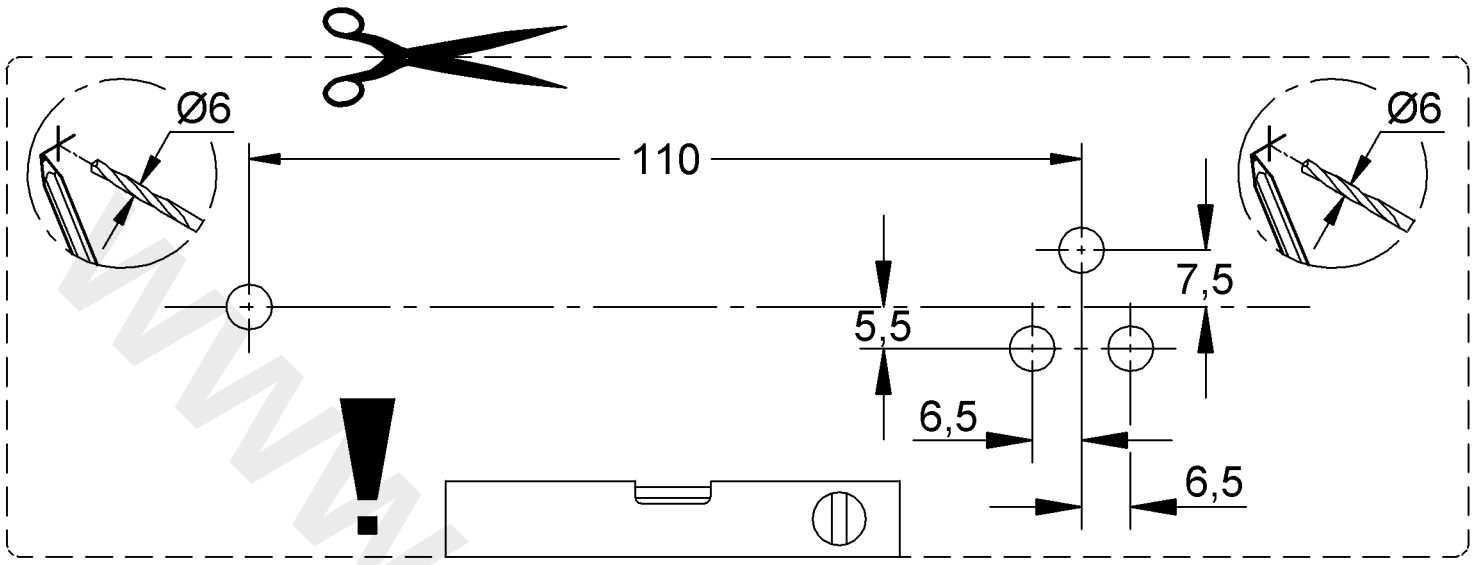

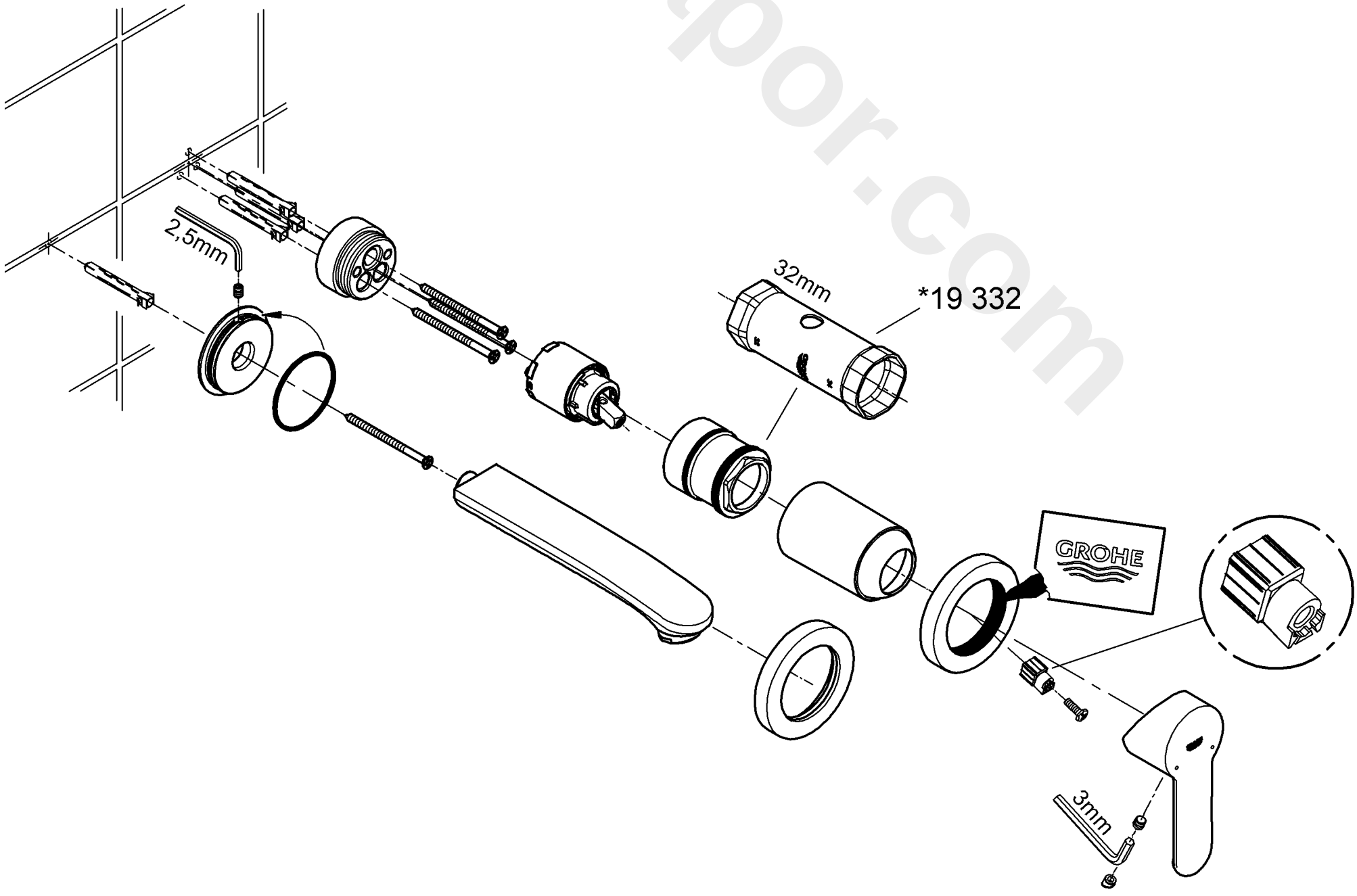

www.divapor.com

99.293.031/ÄM 219055/12.10