ShowerSelect
Thermostat for concealed installation for 2 functions
Finish: **Brushed Black Chrome** Article Number: **15763340**

Description

product features

- 2 functions
- simultaneous use of several outlets
- Select push-button on/off control for 2 outlets
- thermostat cartridge, Start/stop valve to operate the functions
- maximum flow rate at 3 bar: 29,7 l/min
- flow rate upper outlet: 25 l/min
- flow rate lower outlet: 23 l/min
- flow rate by simultaneous use of all outlets: 29,7 l/min
- min. operating pressure: 1 bar
- max. operating pressure: 10 bar
- safety stop at 40 °C
- temperature limitation adjustable
- connection type: basic set
- thermostat is delivered with buttons hand shower and Rain large
- WRAS 2211001 - Approval letter
- WRAS 2211001

Article Details

Price excl. VAT 1.112,50 £

Technology

Design awards

Product image

Scale drawing

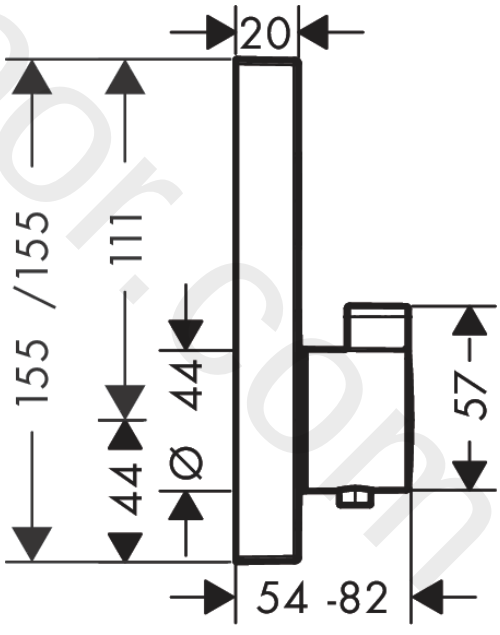

www.divapor.com

ShowerSelect
Thermostat for concealed installation for 2 functions
Finish: **Brushed Black Chrome** Article Number: **15763340**

Flowchart

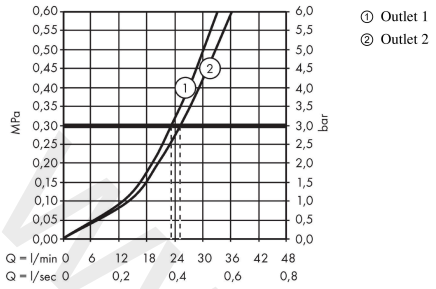

www.divapor.com

ShowerSelect
Thermostat for concealed installation for 2 functions
Finish: **Brushed Black Chrome** Article Number: **15763340**

Exploded Drawing

Year of production: **>11/19**

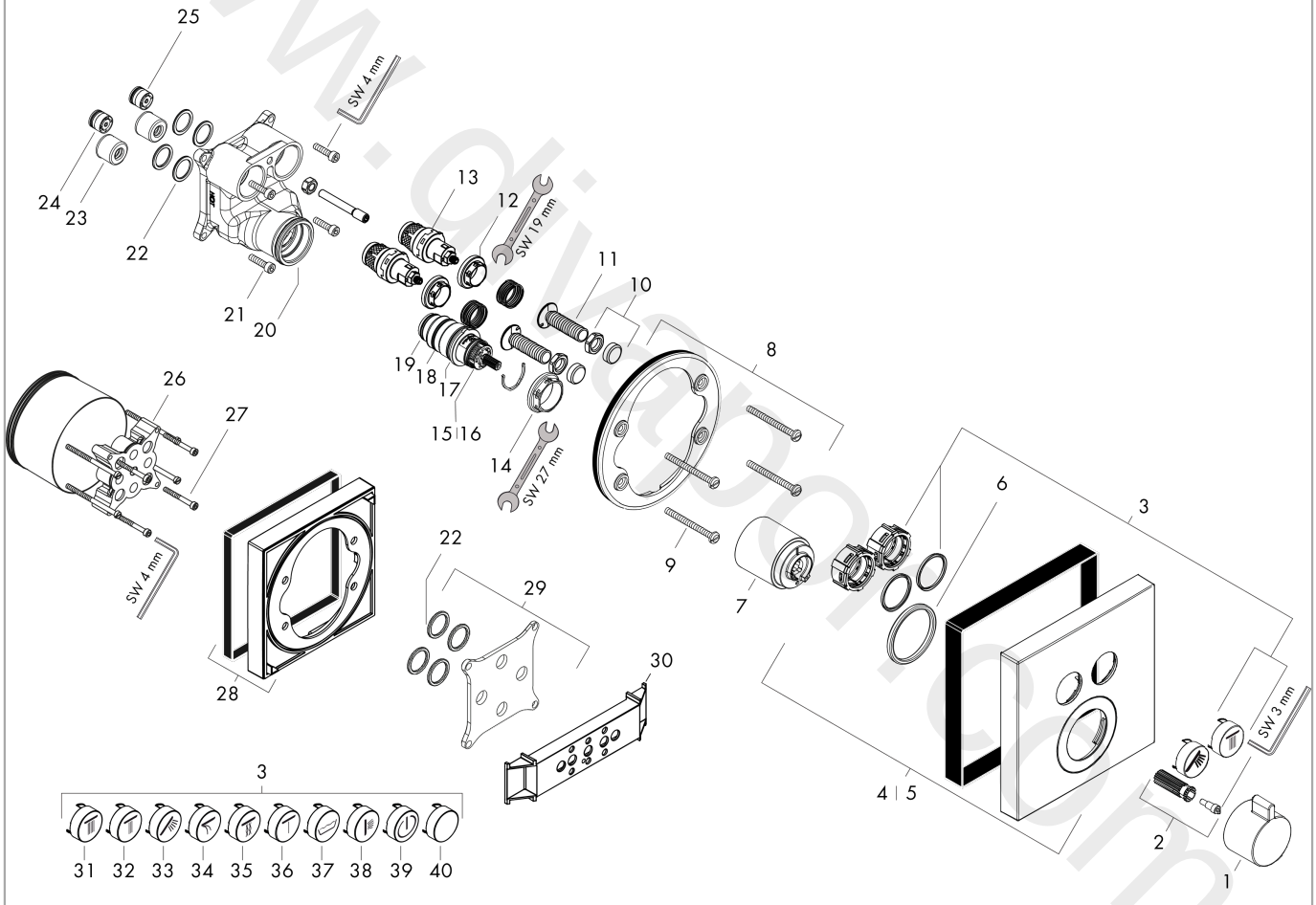

www.diagram.com

ShowerSelect
Thermostat for concealed installation for 2 functions
Finish: **Brushed Black Chrome** Article Number: **15763340**

Spare part list

Year of production: **>11/19**

Pos.	Description	Article Number	Price	PU
1	handle for thermostat	92215340	£ 96,00	1
2	handle fixing set	95843000	£ 9,00	1
3	set of symbols	92218000	£ 79,00	1
4	escutcheon 155 / 155 mm	92217340	£ 163,00	1
5	escutcheon for exchanged connections	92393XXX	> £ 96,00	-
6	O-ring 44x4	98471000	£ 9,00	1
7	sleeve	92216340	£ 51,00	1
8	holder for escutcheon	98793000	£ 43,00	1
9	set of fixing screws	96454000	£ 9,00	1
10	nut and flange	92696000	£ 16,10	1
11	Select-adapter	92219000	£ 6,10	1
12	nut	98368000	£ 13,30	1
13	shut off unit	95758000	£ 110,00	1
14	nut	98913000	£ 20,50	1
15	thermostat cartridge	98282000	£ 110,00	1
16	cartridge for exchanged connections	92373000	£ 275,00	1
17	O-ring 20x1,5	98197000	£ 3,30	1
18	O-ring 25x1,5	98146000	£ 3,30	1
19	O-ring 25x2,5	92146000	£ 16,10	1
20	O-ring 36x2	98156000	£ 3,30	1
21	set of screws	96525000	£ 9,00	1
22	O-ring 16x2	98133000	£ 3,30	1
23	noise reduction	94073000	£ 25,00	1
24	non return valve (pressure-resistant up to 2 MPa)	92594000	£ 16,10	1
25	non return valve	97980000	£ 16,10	1
26	extension 25 mm	13595000	£ 75,00	1
27	set of fixing screws	97747000	£ 3,30	1
28	extension 22 mm	13593340	£ 119,00	1
29	compensation set 1°	95521000	£ 173,00	1
30	fit-up aid	92540000	£ 14,10	1
31	symbol head shower Rain large	93571880	£ 9,00	1
32	symbol head shower Rain small	93572880	£ 9,00	1
33	symbol handshower	93573880	£ 9,00	1
34	symbol Flood jet	93574880	£ 9,00	1
35	symbol Whirl	93575880	£ 9,00	1
36	symbol Mono	93576880	£ 9,00	1
37	symbol tub	93577880	£ 9,00	1
38	symbol body shower	93578880	£ 9,00	1
39	symbol ON/OFF	93579880	£ 9,00	1
40	pushbutton	93955880	£ 20,50	1
a	concealed item	01800180	£ 163,00	1

www.diyapps.com

ShowerSelect
Thermostat for concealed installation for 2 functions
Finish: **Brushed Black Chrome** Article Number: **15763340**

Spare part list

Year of production: **>11/19**

Pos.	Description	Article Number	Price	PU
b	Grease	90920000	£ 16,10	1

www.divapor.com