AXOR

AXOR Starck Organic
Thermostat for concealed installation
Finish: **Chrome** Article Number: **12710000**

product features

- thermostat cartridge
- maximum flow rate at 3 bar: 43 l/min
- min. operating pressure: 1 bar
- max. operating pressure: 10 bar
- Safety stop at 40 °C
- temperature limitation adjustable
- with silencer
- connection type: basic set
- WRAS 1907028

Article Details

Price excl. VAT	537,50 £

Product image

Scale drawing

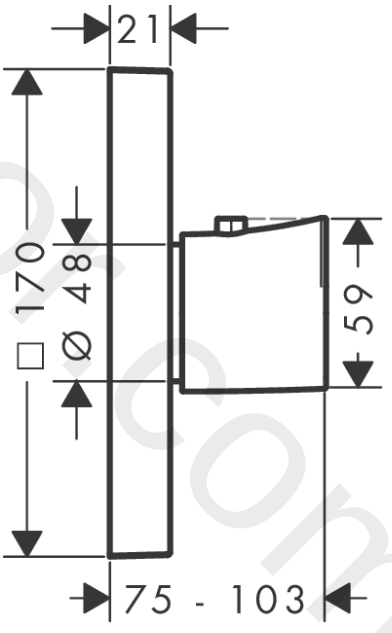

www.diwapoint.com

AXOR

AXOR Starck Organic
Thermostat for concealed installation
Finish: **Chrome** Article Number: **12710000**

Flowchart

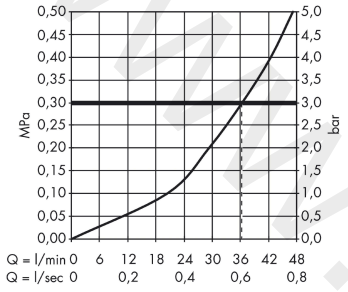

www.divapor.com

AXOR

AXOR Starck Organic
Thermostat for concealed installation
Finish: **Chrome** Article Number: **12710000**

Exploded Drawing

Year of production: **>11/12**

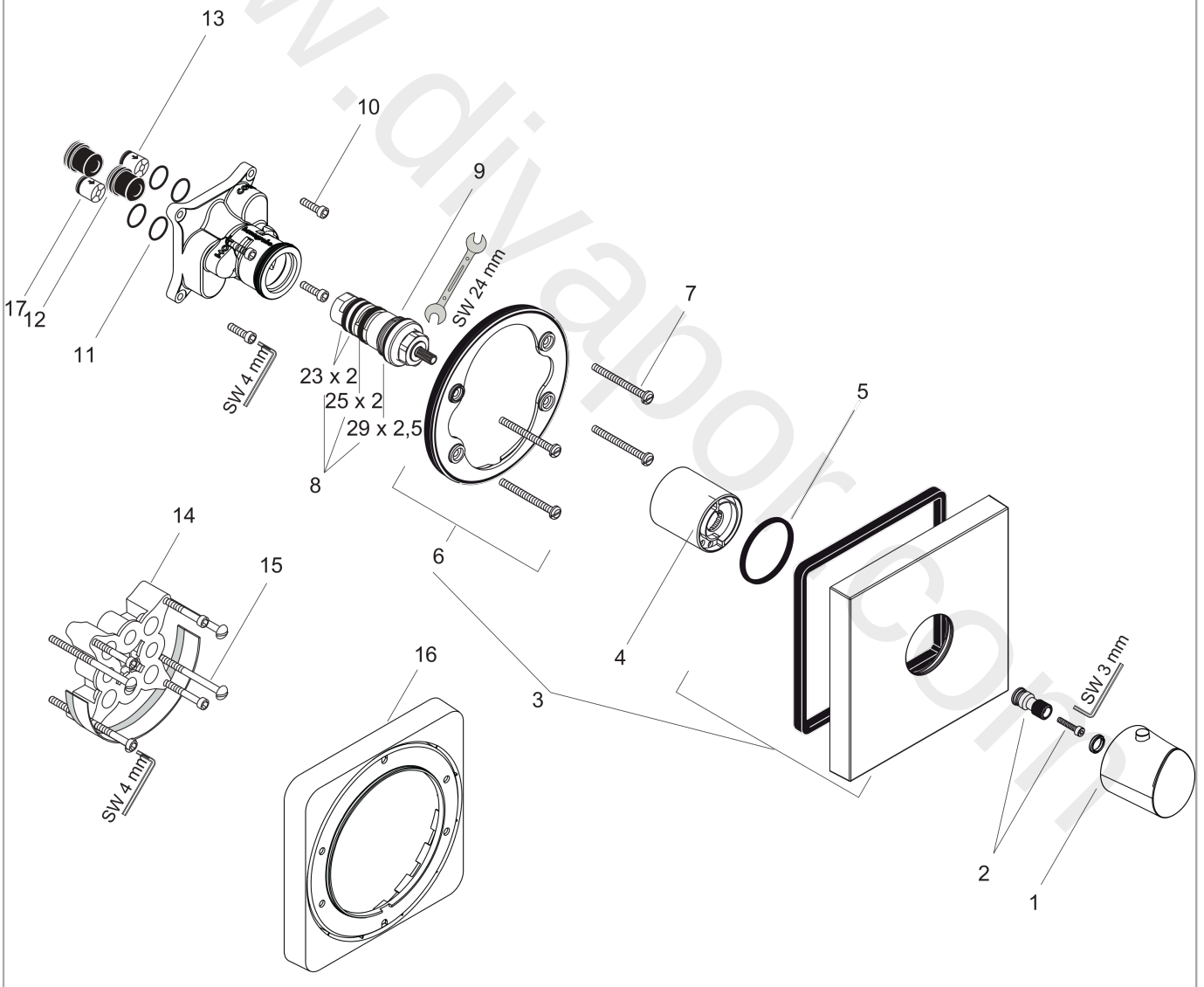

www.diyapor.com

AXOR

AXOR Starck Organic
Thermostat for concealed installation
Finish: **Chrome** Article Number: **12710000**

Spare part list

Year of production: **>11/12**

Pos.		Article Number	Price	PU
1	handle for thermostat	98313000	£ 137,00	1
2	adapter for handle	96435000	£ 20,50	1
3	escutcheon	98318000	£ 224,00	1
4	sleeve	96439000	£ 43,00	1
5	O-Ring 48x3	95508000	£ 3,30	1
6	holder for escutcheon	98793000	£ 43,00	1
7	set of fixing screws	96454000	£ 9,00	1
8	sealing set	95037000	£ 51,00	1
9	thermostat cartridge	94282000	£ 137,00	1
10	set of screws	96525000	£ 9,00	1
11	O-ring 16x2	98133000	£ 3,30	1
12	noise reduction	94073000	£ 25,00	1
13	set of non return valves DW 15	94074000	£ 16,10	1
14	extension 25 mm	13595000	£ 75,00	1
15	set of fixing screws	97747000	£ 3,30	1
16	extension 22 mm	97407000	£ 72,00	1
17	non return valve (pressure-resistant up to 2 MPa)	92594000	£ 16,10	1
a	concealed item	01800180	£ 163,00	1
b	adapter for exchanged connections	93181000	£ 275,00	1
c	fixation set	96615000	£ 59,00	1
d	escutcheon height = 33 mm (when wall is not deep enough).	14966000	£ 92,00	1
e	non return valve with filter	92499000	£ 16,10	1

www.divapart.com